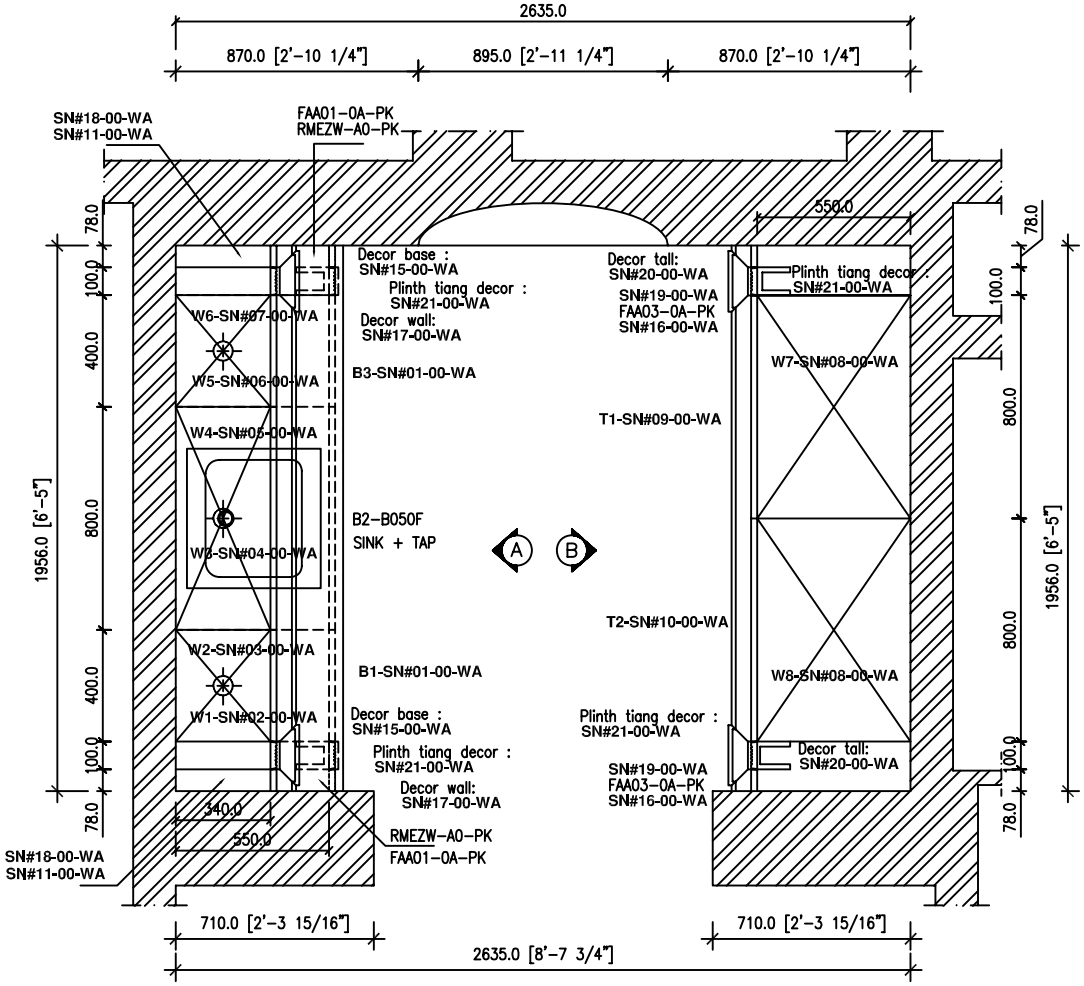

SERVICE KIT/LINEN LAYOUT PLAN

SCALE 1 : 20

PROJECT

PROJECT - BEVELLONI (K-BN#-WA)
UNIT PLAN SECOND FLOOR
LINEN/SERVICE KIT

GENERAL DATA

Door Model	:
Door Colour	:
Door Finish	:
Door Profile	:
Box Front Edge	:
Box Visible Side	:
Handle	:
Cornice	:
Pelmet	:
Plinth	:
Drawer system	:

MODUL

No	Code	Description

Drawn	DATE : 25-06-2009(REV)	NAME : EDI-AMING
Check.	DATE :	NAME : WITONO M.K.
Scale	1 : 20	

Broco®
PT. Broco Möbel Industry

1

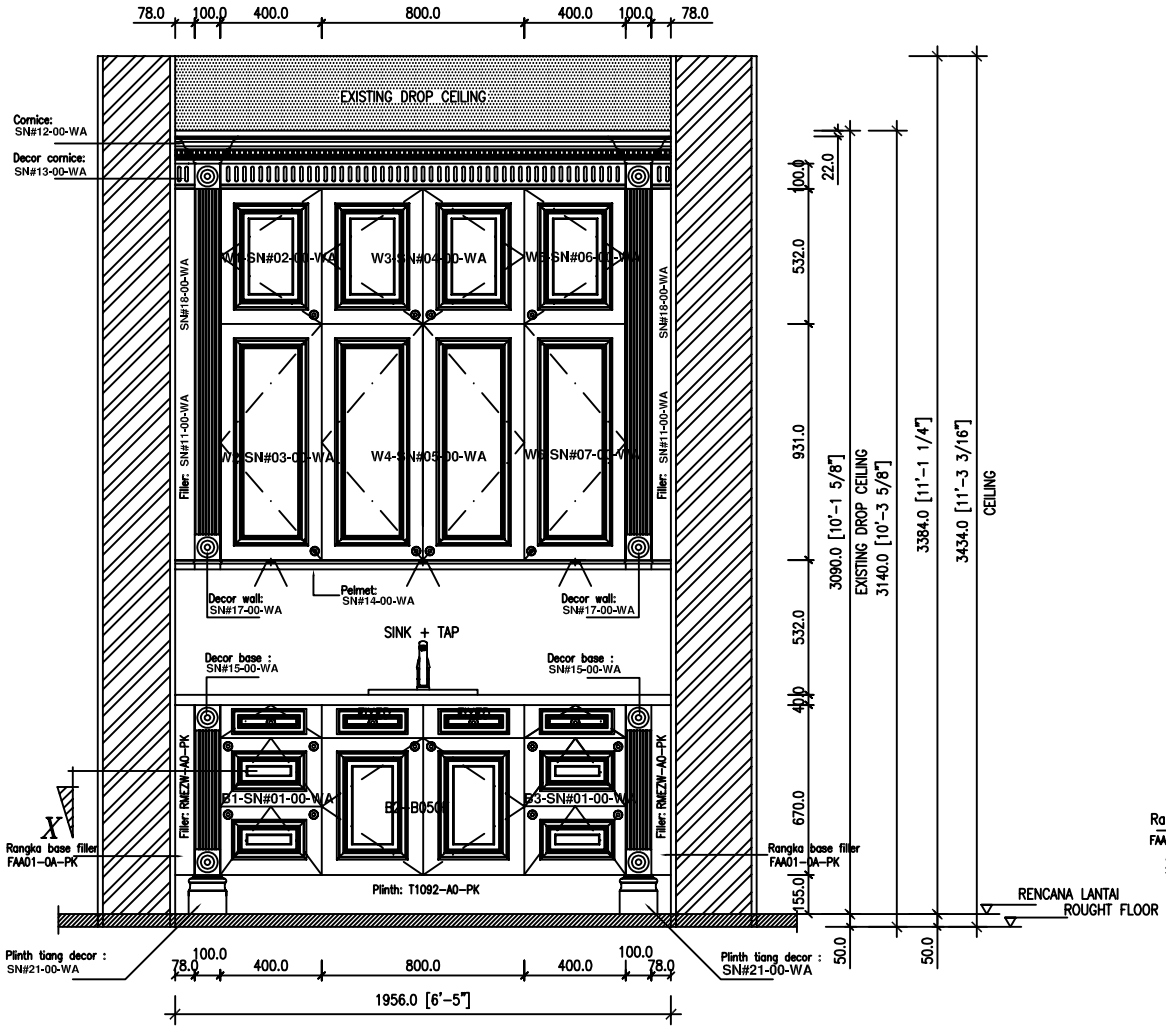

ELEVATION – A

SCALE 1 : 20

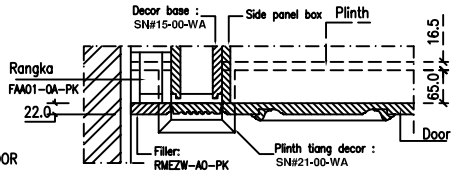

SECTION X–X

PROJECT

PROJECT – BEVELLONI (K-BN#-WA)
UNIT PLAN SECOND FLOOR
LINEN/SERVICE KIT

GENERAL DATA

Door Model	:
Door Colour	:
Door Finish	:
Door Profile	:
Box Front Edge	:
Box Visible Side	:
Handle	:
Cornice	:
Pelmet	:
Plinth	:
Drawer system	:

MODUL

No	Code	Description

Drawn	DATE : 25-06-2009(REV)	NAME : EDI-AMING
Check.	DATE :	NAME : WITONO M.K.
Scale	1 : 20	

Broco®
PT. Broco Möbel Industry

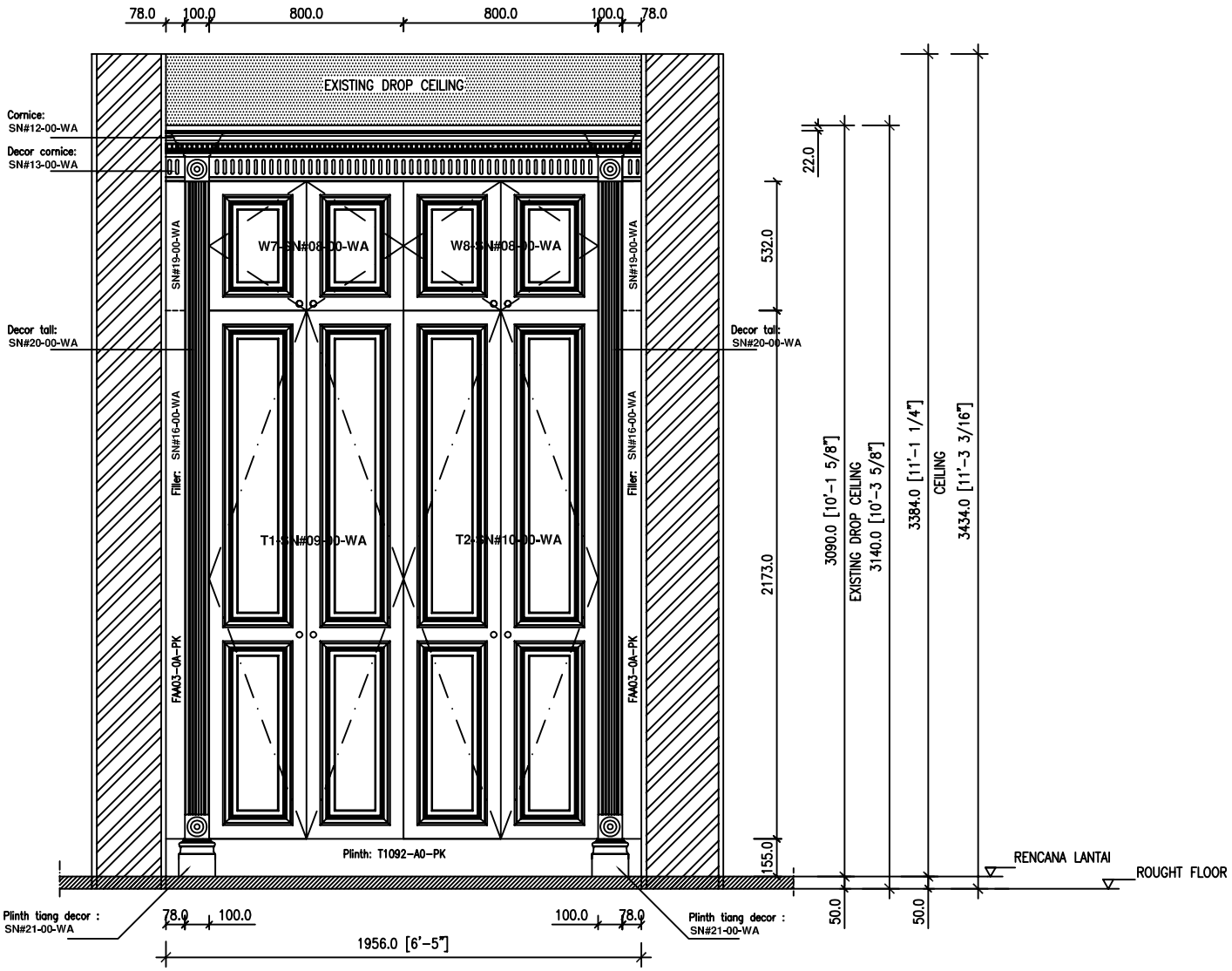

ELEVATION – B

SCALE 1 : 20

PROJECT

PROJECT – BEVELLONI (K-BN#-WA)
UNIT PLAN SECOND FLOOR
LINEN/SERVICE KIT

GENERAL DATA

Door Model	:
Door Colour	:
Door Finish	:
Door Profile	:
Box Front Edge	:
Box Visible Side	:
Handle	:
Cornice	:
Pelmet	:
Plinth	:
Drawer system	:

MODUL

No	Code	Description

Drawn	DATE : 25-06-2009(REV)	NAME : EDI-AMING
Check.	DATE :	NAME : WITONO M.K.
Scale	1 : 20	

Broco®
PT. Broco Möbel Industry

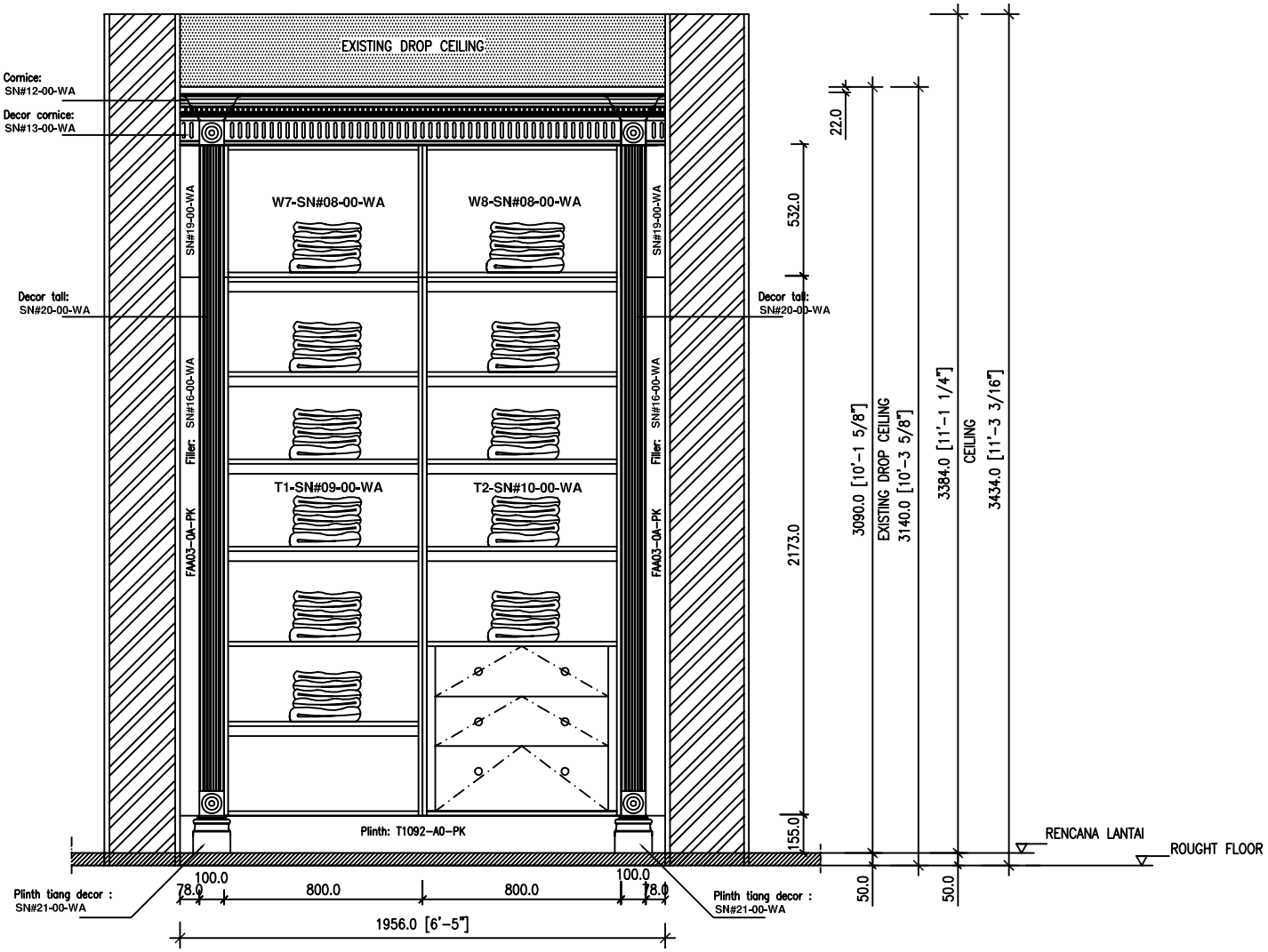

PROJECT

PROJECT - BEVELLONI (K-BN#-WA)
UNIT PLAN SECOND FLOOR
LINEN/SERVICE KIT

GENERAL DATA

Door Model	:
Door Colour	:
Door Finish	:
Door Profile	:
Box Front Edge	:
Box Visible Side	:
Handle	:
Cornice	:
Pelmet	:
Plinth	:
Drawer system	:

MODUL

No	Code	Description

Drawn	DATE : 25-06-2009(REV)	NAME : EDI-AMING
Check.	DATE :	NAME : WITONO M.K.
Scale	1 : 20	

Broco®
PT. Broco Möbel Industry

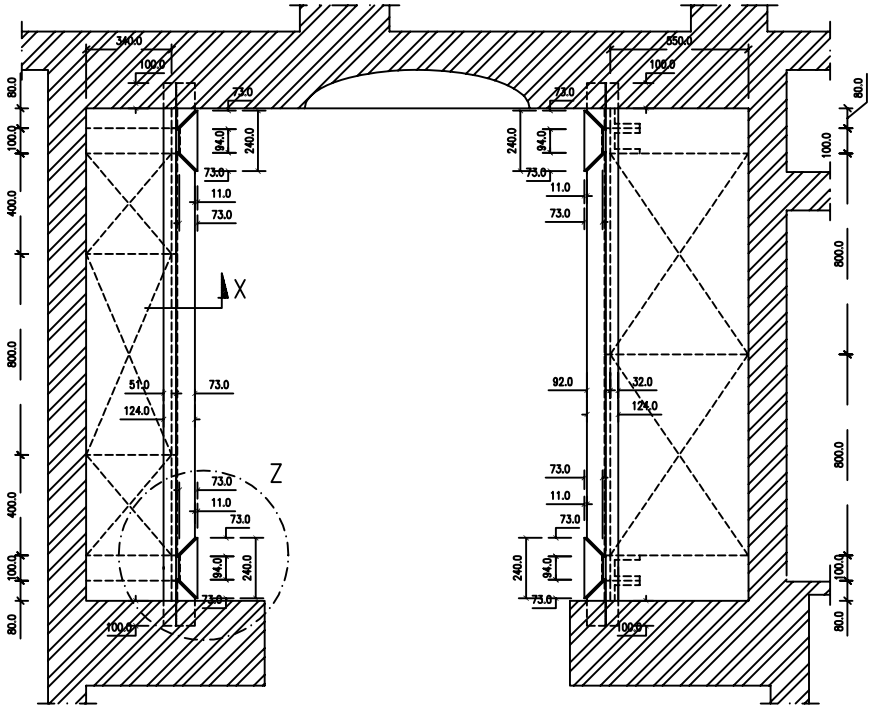

CORNICE LAYOUT PLAN

SN#12-00-WA

SCALE 1 : 20

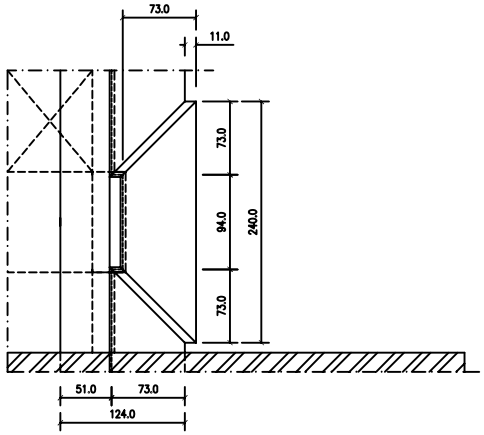

DETAIL-Z

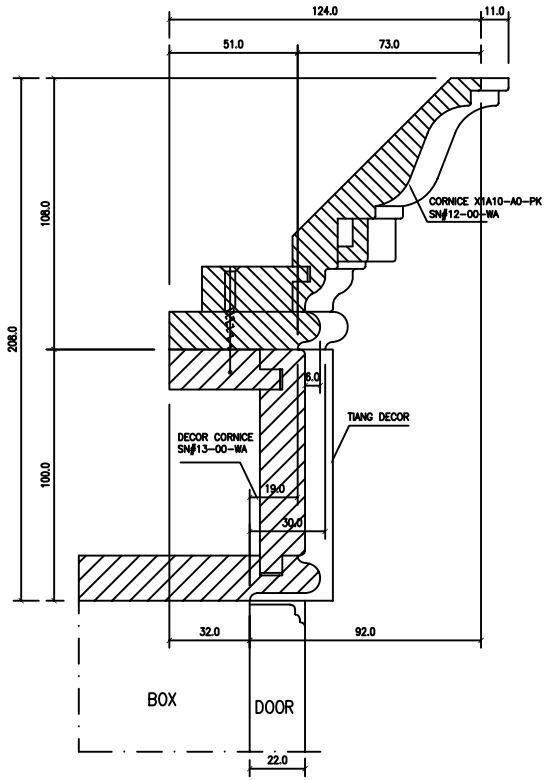

SECTION X-X (APPLICATION)

PROJECT

PROJECT - BEVELLONI (K-BN#-WA)
UNIT PLAN SECOND FLOOR
LINEN/SERVICE KIT

GENERAL DATA

Door Model	:
Door Colour	:
Door Finish	:
Door Profile	:
Box Front Edge	:
Box Visible Side	:
Handle	:
Cornice	:
Pelmet	:
Plinth	:
Drawer system	:

MODUL

No	Code	Description

Drawn	DATE : 30-01-2009	NAME : PEBRI
Check.	DATE :	NAME : ACHING
Scale	1 : 20	

BBroco®
PT. Broco Möbel Industry

1

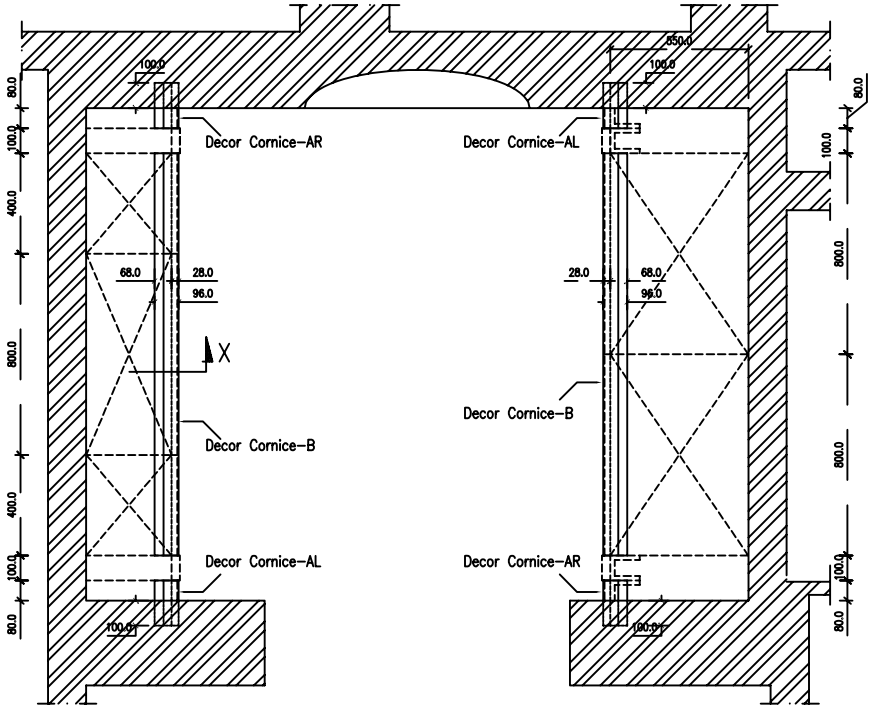

DECOR CORNICE LAYOUT PLAN

SN#13-00-WA

SCALE 1 : 20

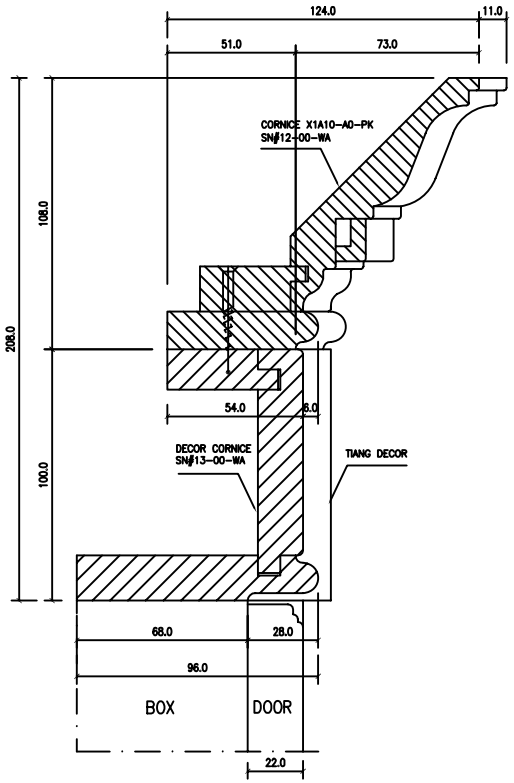

SECTION X-X (APPLICATION)

PROJECT

PROJECT - BEVELLONI (K-BN#-WA)
UNIT PLAN SECOND FLOOR
LINEN/SERVICE KIT

GENERAL DATA

Door Model	:
Door Colour	:
Door Finish	:
Door Profile	:
Box Front Edge	:
Box Visible Side	:
Handle	:
Cornice	:
Pelmet	:
Plinth	:
Drawer system	:

MODUL

No	Code	Description

Drawn	DATE : 30-01-2009	NAME : PEBRI
Check.	DATE :	NAME : ACHING
Scale	1 : 20	

Broco®
PT. Broco Möbel Industry

1

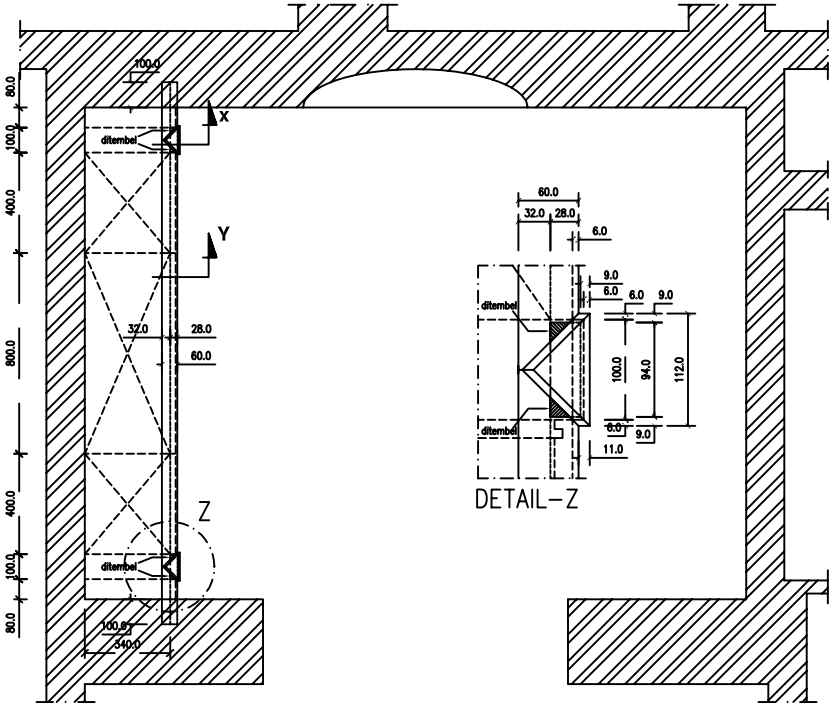

DETAIL-Z

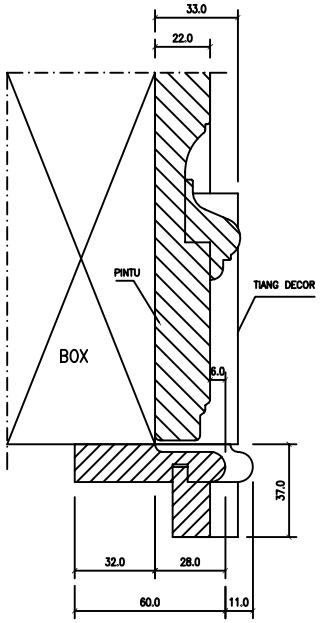

SECTION Y-Y

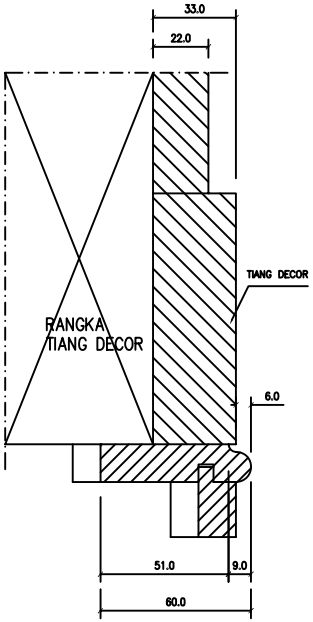

SECTION X-X

PELMET LAYOUT PLAN

SN#14-00-WA

SCALE 1 : 20

PROJECT

PROJECT - BEVELLONI (K-BN#-WA)
UNIT PLAN SECOND FLOOR
LINEN/SERVICE KIT

GENERAL DATA

Door Model	:
Door Colour	:
Door Finish	:
Door Profile	:
Box Front Edge	:
Box Visible Side	:
Handle	:
Cornice	:
Pelmet	:
Plinth	:
Drawer system	:

MODUL

No	Code	Description

Drawn	DATE : 30-01-2009	NAME : PEBRI
Check.	DATE :	NAME : ACHING
Scale	1 : 20	

Broco®
PT. Broco Möbel Industry

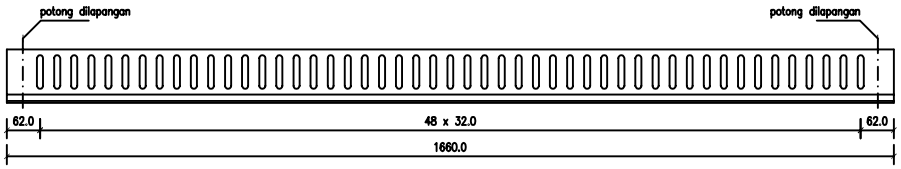

FRONT VIEW

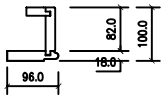

SIDE VIEW

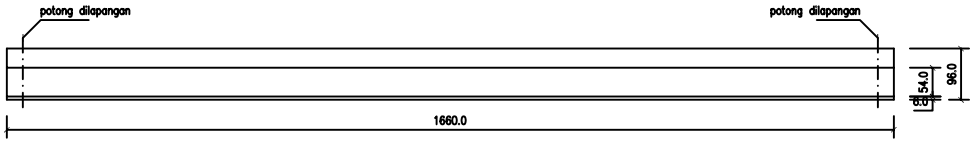

TOP VIEW

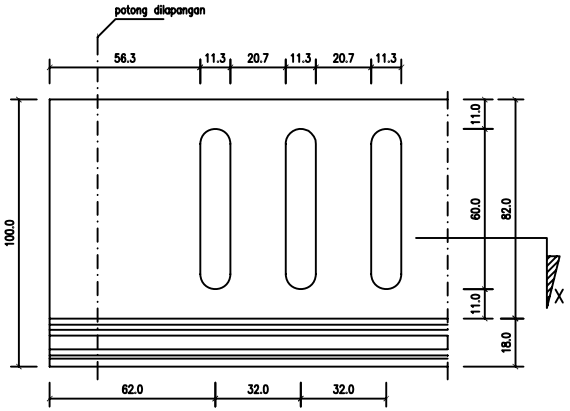

FRONT VIEW DETAIL

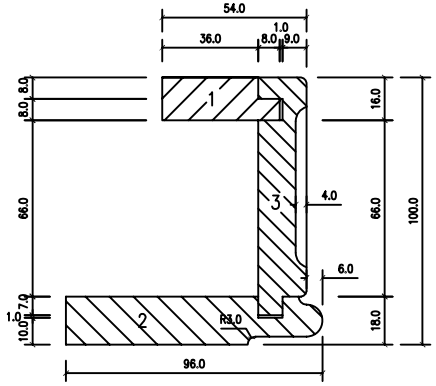

SIDE VIEW DETAIL

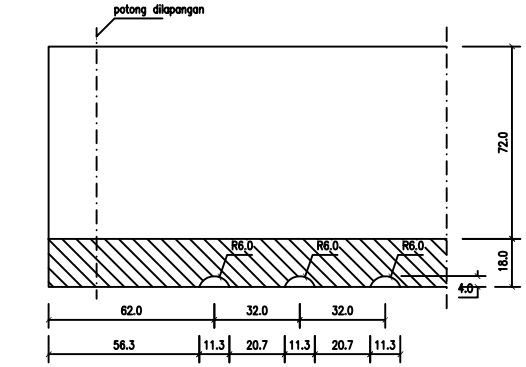

SECTION X–X

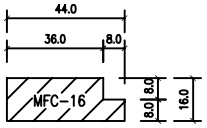

DETAIL 1

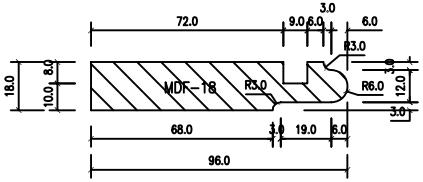

DETAIL 2

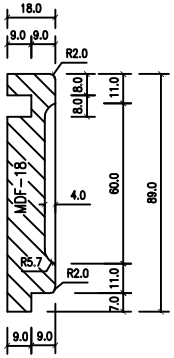

DETAIL 3

S N # 1 3 – 0 0 – W A

LEGEND

Material : – MDF 18 mm R/R
– MFC 16 mm W/W

Finishing : Traditional Painted

NB :

Coakan menggunakan Mata Pisau 12 mm dimasukan sedalam 4 mm

REVISION	DATE	NAME
Drawing Name : Decor Cornice–B		Job Name :
L 100	W 1660	H/T 96	With :
Scale	1 : 20, detail 1 : 2	
Dimensions are in milimeter		
DO NOT SCALE DRAWING		
Drawn	date 21 Jan 2009	name Pebri
Check.	date Jan 2009	name Aching
Approv.	date	name

Broco®

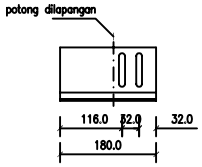

FRONT VIEW

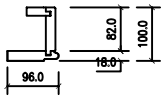

SIDE VIEW

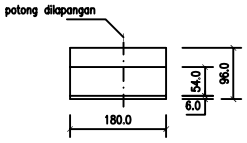

TOP VIEW

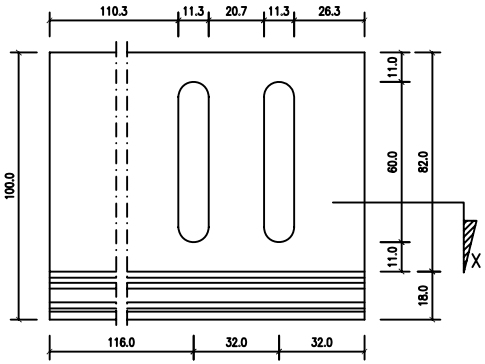

FRONT VIEW DETAIL

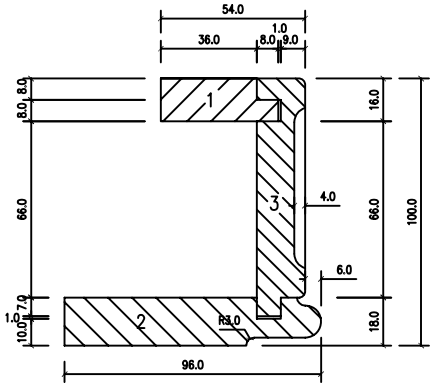

SIDE VIEW DETAIL

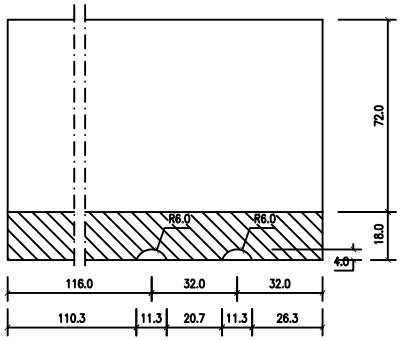

SECTION X–X

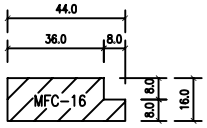

DETAIL 1

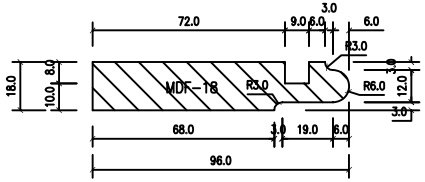

DETAIL 2

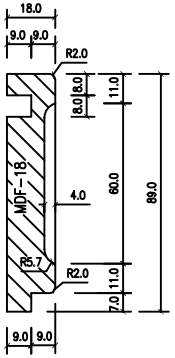

DETAIL 3

S	N	#	1	3	–	0	0	–	W	A		

LEGEND

Material : – MDF 18 mm R/R
– MFC 16 mm W/W

Finishing : Traditional Painted

NB :

Coakan menggunakan Mata Pisau 12 mm dimasukan sedalam 4 mm

REVISION	DATE	NAME
Drawing Name : Decor Cornice–AL		Job Name :
L 100	W 180	H/T 96
Scale	1 : 20, detail 1 : 2	With :
Dimensions are in milimeter		
DO NOT SCALE DRAWING		
Drawn	date 21 Jan 2009	name Pebri
Check.	date Jan 2009	name Aching
Approv.	date	name

Broco®

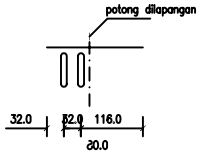

FRONT VIEW

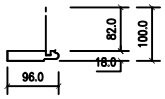

SIDE VIEW

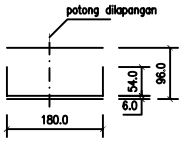

TOP VIEW

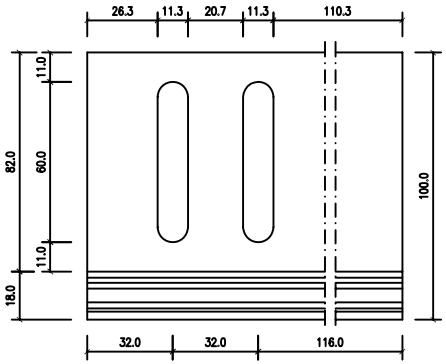

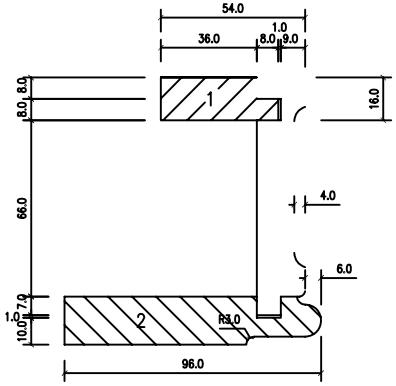

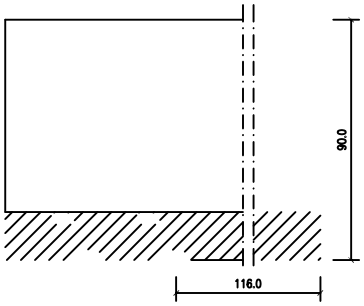

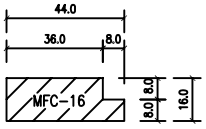

DETAIL 1

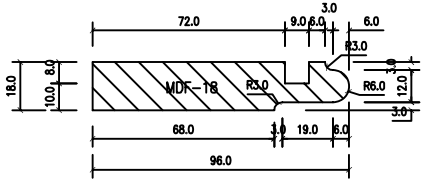

DETAIL 2

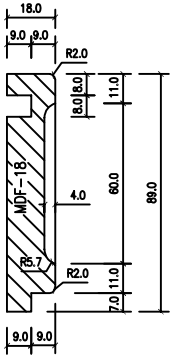

DETAIL 3

S	N	#	1	3	–	0	0	–	W	A		

LEGEND

– MFC 16 mm W/W

Finishing : Traditional Painted

REVISION	DATE	NAME
Drawing Name : Decor Cornice–AR		Job Name :
L 100	W 180	H/T 96
Scale	1 : 20, detail 1 : 2	With :
Dimensions are in milimeter		
DO NOT SCALE DRAWING		
Drawn	date 21 Jan 2009	name
Check.	date Jn	name Aching
Approv.	date	name

Broco®

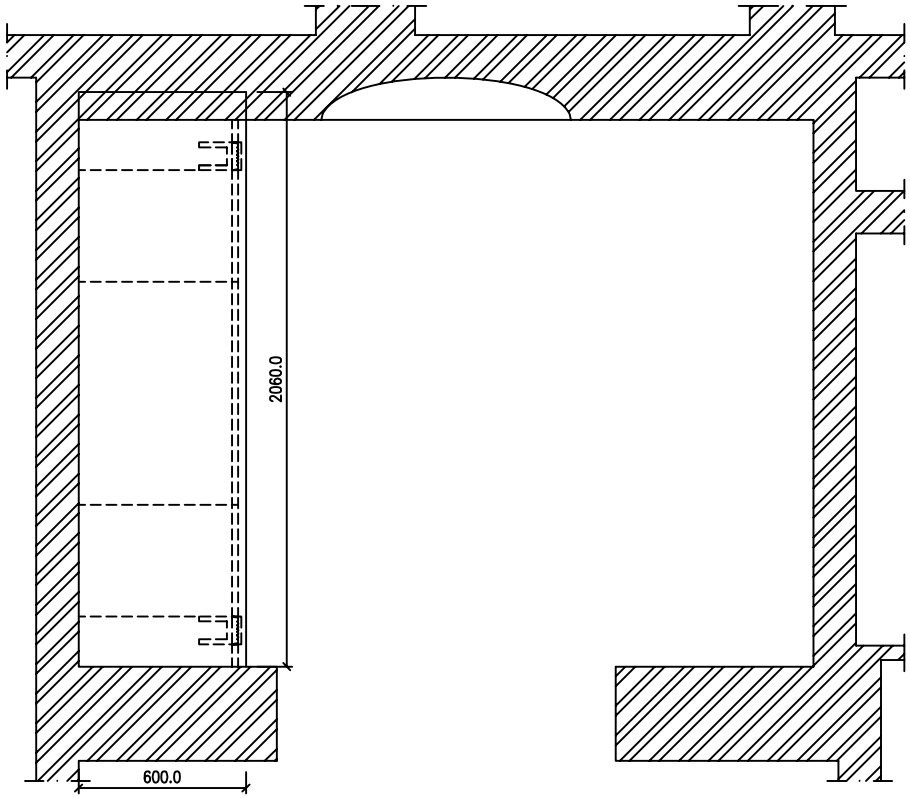

MAL WORKTOP PLAN

SN#22-00-WA

SCALE 1 : 20

PROJECT

PROJECT - BEVELLONI (K-BN#-WA)
UNIT PLAN SECOND FLOOR
LINEN/SERVICE KIT

GENERAL DATA

Door Model	:
Door Colour	:
Door Finish	:
Door Profile	:
Box Front Edge	:
Box Visible Side	:
Handle	:
Cornice	:
Pelmet	:
Plinth	:
Drawer system	:

MODUL

No	Code	Description

Drawn	DATE : 30-01-2009	NAME : PEBRI
Check.	DATE :	NAME : ACHING
Scale	1 : 20	

Broco®
PT. Broco Möbel Industry

1

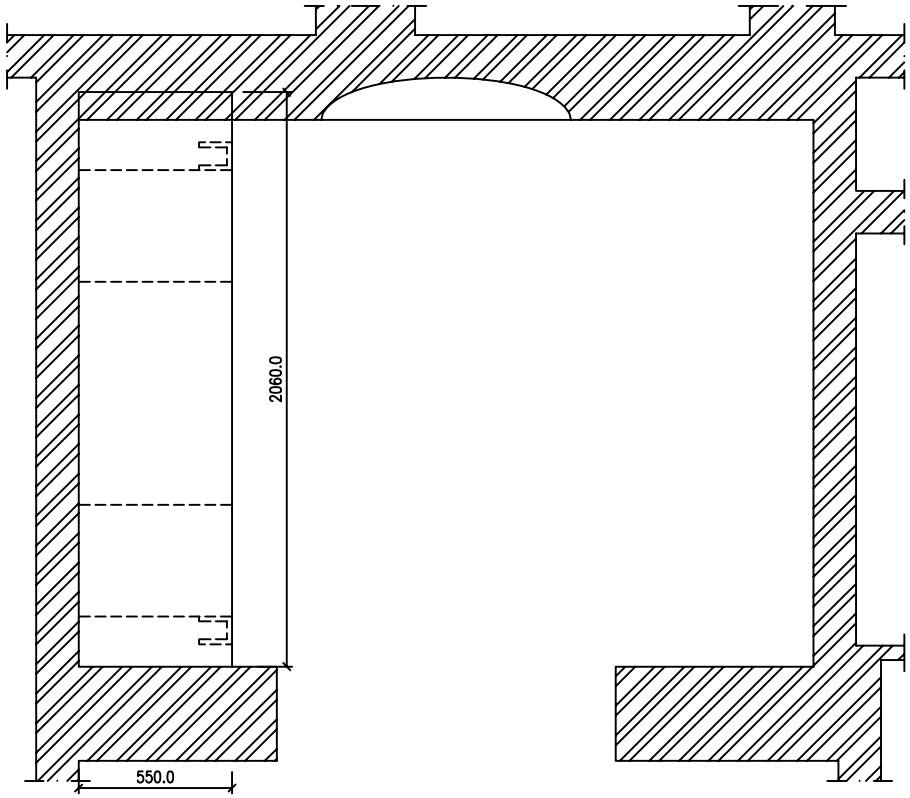

BASE WORKTOP PLAN

SN#23-00-WA

SCALE 1 : 20

PROJECT

PROJECT - BEVELLONI (K-BN#-WA)
UNIT PLAN SECOND FLOOR
LINEN/SERVICE KIT

GENERAL DATA

Door Model	:
Door Colour	:
Door Finish	:
Door Profile	:
Box Front Edge	:
Box Visible Side	:
Handle	:
Cornice	:
Pelmet	:
Plinth	:
Drawer system	:

MODUL

No	Code	Description

Drawn	DATE : 30-01-2009	NAME : PEBRI
Check.	DATE :	NAME : ACHING
Scale	1 : 20	

Broco®
PT. Broco Möbel Industry

1